Shielded Sub-D Backshells DVZK Series

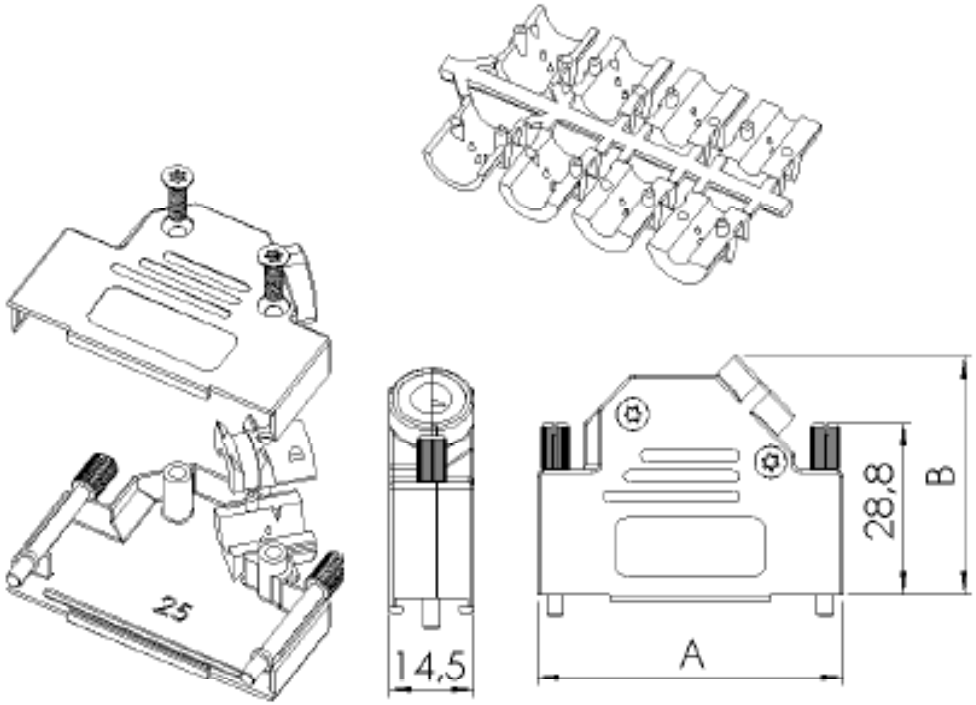

Specifications

Material and finish:	Zinc die-cast, nickel plated or black iron zinc
Cable strain relief:	Steel fibre reinforced Polycarbonate (UL94V-0) for EMI/RFI screening
Locking screws:	Long solid jackscrew with groove for indication of thread
Temperature range:	-40°C to 120°C
Cable diameter:	4,0 – 13,0 mm
Attenuation factor:	>40 dB between 30 MHz and 1 GHz
Meet requirements:	VDE 0871, FCC 20780, 89 / 336 / EU

Amphenol Shenzhen RoHS Compliant EU 2002/95/EC

TYPE	A	B
DVZK9	31	36,2
DVZK9L	31	40,2
DVZK15	39,5	40,2
DVZK25	53,2	40,2
DVZK37	69,7	40,2

Amphenol Socapex

TOL. GEN. : +/-0.05
VOLUME:
AREA:
PLATING:
TREATMENT:
MATERIAL:

SERIES
NUMBER SERIES DVZK
DATE 2006.06.20
FILE:
DESIGNATION D-SUB Metal Hood, 45 degree

CUSTOMER	MODIFICATIONS	DRAW	DATE	APPROVE	IND
	Original	Lik	06/20/06	Terry	A

INTERNAL PART NUMBER L17DVZK09K