Crystal Units
Surface Mount Type CX8045GA

KYOCERA

8.0×4.5mm for Automotive

RoHS Compliant

Features

- Crystal unit for automotive electronics
- Small and low profile (8.0×4.5×1.8mm)
- Ceramic package
- Reflow compatible
- AEC-Q200 qualified

Applications

- ECU

How to Order

CX8045GA 08000 □□ □ □ □ □□
① ② ③ ④ ⑤ ⑥ ⑦

① Series
② Frequency
③ Load Capacitance

D0	8 pF
H0	12 pF

④ Frequency Tolerance

P	$\pm50\times10^{-6}$
Q	$\pm100\times10^{-6}$

⑤ Operating Temp. Range ⑥ Frequency Temp. Stability

TW	−40 to +150°C	$\pm200\times10^{-6}$

⑦ Individual Specification

Packaging (Tape & Reel 3000/ 1000 pcs./ reel)

Specifications

Item	Symbol	Specification	Units	Remarks
Frequency Range	f_{nom}	4000 to 30000	kHz	
Overtone Order	OT	Fundamental	—	
Load Capacitance	CL	8	pF	
Frequency Tolerance	f_{tol}	±100	$\times10^{-6}$	25°C±3°C
Motional Series Resistance	R1	Table 1	ohm	
Drive Level	DL	Table 2	μW	
Operating Temp. Range	T_{use}	−40 to +150	°C	
Storage Temp. Range	T_{stg}	−40 to +150	°C	
Frequency Temp. Characteristics	f_{tem}	±200	$\times10^{-6}$	Freq. deviation from the value at 25°C

• Please contact us for other specifications.

Table1 Motional Series Resistance

Frequency Range	Motional Series Resistance
$4000\le f_{nom}<7200$kHz	300Ω max.
$7200\le f_{nom}<10000$kHz	200Ω max.
$10000\le f_{nom}<12000$kHz	150Ω max.
$12000\le f_{nom}\le30000$kHz	100Ω max.

Table2 Level of Drive

Frequency Range	Level of Drive
$4000\le f_{nom}<16000$kHz	10μW (500μW max.)
$16000\le f_{nom}<25000$kHz	10μW (300μW max.)
$25000\le f_{nom}\le30000$kHz	10μW (100μW max.)

Dimensions

(Unit: mm)

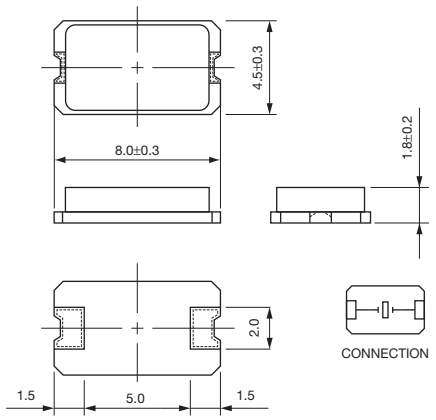

Recommended Land Pattern
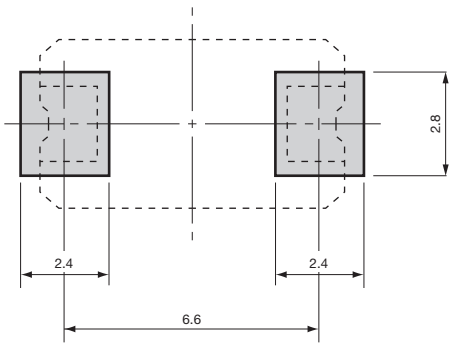
(Unit: mm)