PROPERTY OF DEUTSCH E.C.D.
This drawing contains proprietary information that shall not be disclosed, duplicated, nor used in whole or in part for any purpose other than to evaluate this drawing.

C	WT06*-**-**P/S*

REVISIONS

REV	DESCRIPTION	DATE	APPROVED
C	REVISED PER E.O. C3089	2-19-98	BJH

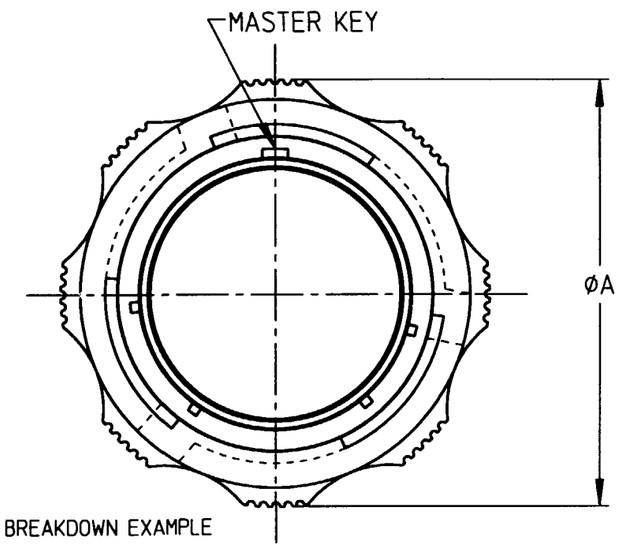

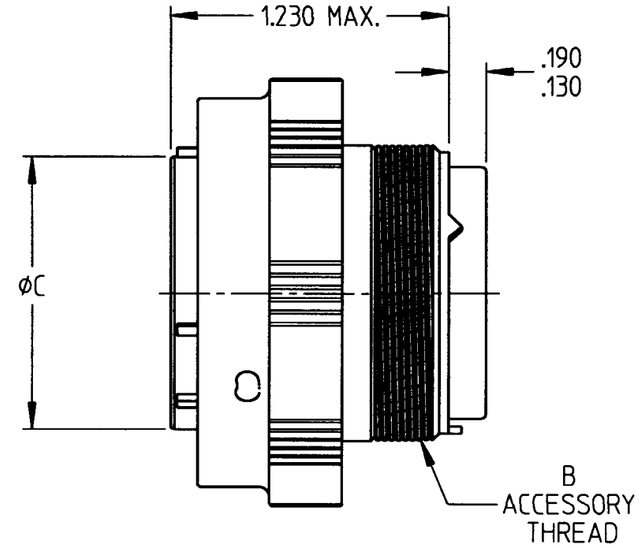

PART NUMBER BREAKDOWN EXAMPLE

WT06B-24-31PN

- INSERT CLOCKING (REF ENVELOPE DRAWING #38500B) N = STANDARD
- P = PIN S = SOCKET INSERT
- INSERT ARRANGEMENT
- SHELL SIZE
- FINISH: B = BLACK NONCONDUCTIVE ANODIZE
  L = NICKEL
  W = OLIVE DRAB
- PLUG CONNECTOR
- WORLD TRANSMISSION SERIES

PART NUMBER	SHELL SIZE	A REF.	B THREAD	C REF.
WT06*-20-****	20	1.750	1.188-18 UNEF	1.072
WT06*-24-****	24	2.050	1.438-18 UNEF	1.322

3. AVAILABLE INSERT ARRANGEMENTS ARE ILLUSTRATED DEUTSCH INFORMATION DRAWING #0925-204-0000.
2. CONNECTORS ARE SHIPPED LESS BACKSHELL, CONTACTS, SEALING PLUGS, AND INSERTION/REMOVAL TOOLS.
1. DIMENSIONS ARE IN INCHES UNLESS OTHERWISE SPECIFIED.

	SIGNATURE & DATE
DR	D.WHITACRE 7/12/94
CHK	Jo POWELL 7-26-94
PE	R. Gross 7-22-94
APPD	
SCALE NONE	WT —

CONNECTOR, PLUG

BAYONET COUPLING
WORLD TERMINATION SERIES

ENVELOPE

CP — MATL CODE —

DEUTSCH
ENGINEERED CONNECTING DEVICES
36033 Whitter Ave.
Hemet, California

A DWG SIZE | WT06*-**-**P/S* | CODE 11139 | SHEET 1 OF 1

WT06X-XX-XXPSX_ENV_C