PME271M Series Metallized Impregnated Paper, Class X2, 275 VAC

Electronic Components KEMET CHARGED.

Overview

The PME271M Series is constructed of multilayer metallized paper encapsulated and impregnated in self-extinguishing material meeting the requirements of UL 94 V–0.

Applications

Typical applications include worldwide use in electromagnetic interference suppression in all X2 and across-the-line applications.

Benefits

- Approvals: ENEC, UL, cUL
- Rated voltage: 275 VAC 50/60 Hz
- Capacitance range: 0.001 - 0.6 µF
- Lead spacing: 10.2 – 25.4 mm
- Capacitance tolerance: M = ±20% (for C ≤ 0.1 µF), K = ±10% (for C > 0.1 µF)
- Climatic category: 40/110/56, IEC 60068–1
- Tape and reel in accordance with IEC 60286–2
- RoHS Compliant and lead-free terminations
- Operating temperature range of -40˚C to +110˚C
- 100% screening factory test at 2,150 VDC

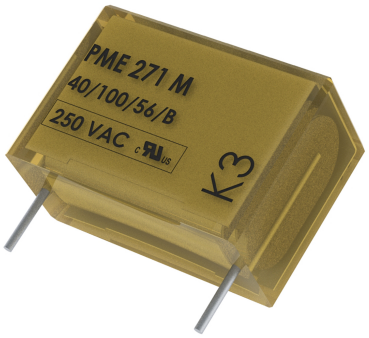

Legacy Part Number System

PME271	M	(B)	610(0)	M	R30
Series	Rated Voltage (VAC)	Lead Spacing (mm)	Capacitance Code (pF)	Capacitance Tolerance	Lead and Packaging Code
X2, Metallized Paper	M = 275	Blank = Standard A = 10.2 B = 15.2 D = 22.5	Digits 2 – 4(3) indicates the first three digits of the capacitance value. First digit indicates the total number of digits in the capacitance value.	M = ±20% (for C ≤ 0.1 µF) K = ±10% (for C > 0.1 µF)	See Ordering Options Table

New KEMET Part Number System

P	276	Q	E	104	M	275	A
Capacitor Class	Series	Lead Spacing (mm)	Size Code	Capacitance Code (pF)	Capacitance Tolerance	Rated Voltage (VAC)	Lead and Packaging Code
P = Paper	X2, Metallized Paper	H = 10.2 Q = 15.2 C = 20.3 S = 22.5 E = 25.4	See Dimension Table	First two digits indicate the two most significant digits of the capacitance value in picofarads. The third digit is the number of following zeros.	M = ±20% (for C ≤ 0.1 µF) K = ±10% (for C > 0.1 µF)	275 = 275	See Ordering Options Table

Benefits cont'd

- The highest possible safety regarding active and passive flammability
- Excellent self-healing properties ensure long life even when subjected to frequent over voltages
- Good resistance to ionization due to impregnated dielectric
- High dV/dt capability
- The impregnated paper ensures excellent stability and outstanding reliability properties, especially in applications with continuous operation

Ordering Options Table

Lead Spacing Nominal (mm)	Type of Leads and Packaging	Lead Length (mm)	KEMET Lead and Packaging Code	Legacy Lead and Packaging Code
10.2	**Standard Lead and Packaging Options**			
	Bulk (Bag) – Short Leads	6 +0/-1	C	R06
	Bulk (Bag) – Max Length Leads	30 +5/-0	A	R30
	Tape & Reel (Standard Reel)	H_0= 18.5 +/-0.5	L	R19T0
	Other Lead and Packaging Options			
	Tape & Reel (Large Reel)	H_0= 18.5 +/-0.5	P	R19T1
Native 10.2 formed to 7.5	Ammo Pack	H_0= 16.5 +/-0.5	LAF3	R30XA
15.2	**Standard Lead and Packaging Options**			
	Bulk (Bag) – Short Leads	6 +0/-1	C	R06
	Bulk (Bag) – Max Length Leads	30 +5/-0	A	R30
	Tape & Reel (Standard Reel)	H_0= 18.5 +/-0.5	L	R19T0
	Other Lead and Packaging Options			
	Tape & Reel (Standard Reel)	H_0= 18.5 +/-0.5	P	R19T1
20.3	**Standard Lead and Packaging Options**			
	Bulk (Tray) – Short Leads	6 +0/-1	C	R06
	Bulk (Bag) – Max Length Leads	30 +5/-0	A	R30
	Tape & Reel (Standard Reel)	H_0= 18.5 +/-0.5	L	R19T0
	Other Lead and Packaging Options			
	Tape & Reel (Large Reel)	H_0= 18.5 +/-0.5	P	R19T1
25.4	**Standard Lead and Packaging Options**			
	Bulk (Tray) – Short Leads	6 +0/-1	C	R06
	Bulk (Bag) – Max Length Leads	30 +5/-0	A	R30

Dimensions – Millimeters

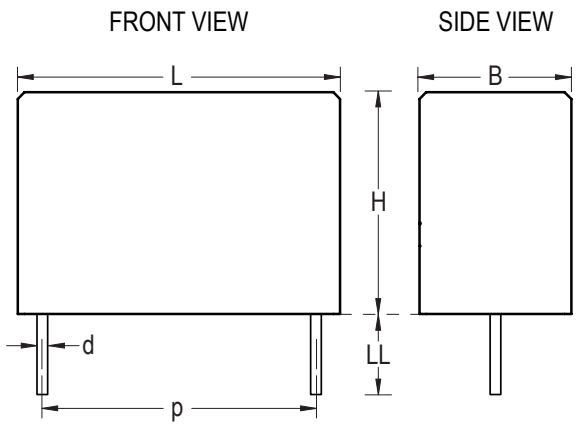

Size Code	p		B		H		L		d	
	Nominal	Tolerance	Nominal	Tolerance	Nominal	Tolerance	Nominal	Tolerance	Nominal	Tolerance
HE	10.2	+/-0.4	3.9	Maximum	7.5	Maximum	13.5	Maximum	0.6	+/-0.05
HH	10.2	+/-0.4	4.1	Maximum	8.2	Maximum	13.5	Maximum	0.6	+/-0.05
HL	10.2	+/-0.4	5.1	Maximum	10.5	Maximum	13.5	Maximum	0.6	+/-0.05
QE	15.2	+/-0.4	5.2	Maximum	10.5	Maximum	18.5	Maximum	0.8	+/-0.05
QL	15.2	+/-0.4	6	Maximum	12.5	Maximum	18.5	Maximum	0.8	+/-0.05
QP	15.2	+/-0.4	7.8	Maximum	13.5	Maximum	18.5	Maximum	0.8	+/-0.05
QS	15.2	+/-0.4	8.5	Maximum	14.3	Maximum	18.5	Maximum	0.8	+/-0.05
CE	20.3	+/-0.4	7.6	Maximum	14	Maximum	24	Maximum	0.8	+/-0.05
CJ	20.3	+/-0.4	9	Maximum	15	Maximum	24	Maximum	0.8	+/-0.05
CP	20.3	+/-0.4	11.3	Maximum	16.5	Maximum	24	Maximum	0.8	+/-0.05
SJ	22.5	+/-0.4	8	Maximum	17	Maximum	27	Maximum	0.8	+/-0.05
SP	22.5	+/-0.4	10	Maximum	19	Maximum	27	Maximum	0.8	+/-0.05
SU	22.5	+/-0.4	12	Maximum	22	Maximum	27	Maximum	0.8	+/-0.05
EG	25.4	+/-0.4	10.5	Maximum	17.3	Maximum	30.5	Maximum	1	+/-0.05
EJ	25.4	+/-0.4	12.1	Maximum	19	Maximum	30.5	Maximum	1	+/-0.05
EL	25.4	+/-0.4	15.3	Maximum	22	Maximum	30.5	Maximum	1	+/-0.05
Note: See Ordering Options Table for lead length (LL) options.										

Performance Characteristics

Rated Voltage	275 VAC 50/60 Hz	
Capacitance Range	0.001 – 0.6 µF	
Capacitance Tolerance	±20%, ±10%, ±5% on request	
Temperature Range	-40°C to +110°C	
Climatic Category	40/110/56	
Approvals	ENEC, UL, cUL	
Dissipation Factor	Maximum Values at +23°C	
	1 kHz	1.3%
Test Voltage Between Terminals	The 100% screening factory test is carried out at 2,150 VDC. The voltage level is selected to meet the requirements in applicable equipment standards. All electrical characteristics are checked after the test. It is not permitted to repeat this test as there is a risk to damage the capacitor. KEMET is not liable in such case for any failures.	
Insulation Resistance	Minimum Values Between Terminals	
	C ≤ 0.33 µF	≥ 12,000 MΩ
	C > 0.33 µF	≥ 4,000 MΩ • µF
In DC Applications	Recommended voltage ≤ 630 VDC	

Environmental Test Data

Test	IEC Publication	Procedure
Endurance	EN/IEC 60384–14	1.25 x V_R VAC 50 Hz, once every hour increase to 1,000 VAC for 0.1 second, 1,000 hours at upper rated temperature
Vibration	IEC 60068–2–6 Test Fc	3 directions at 2 hours each 10 – 55 Hz at 0.75 mm or 98 m/s^2
Bump	IEC 60068–2–29 Test Eb	1,000 bumps at 390 m/s^2
Change of Temperature	IEC 60068–2–14 Test Na	Upper and lower rated temperature 5 cycles
Active Flammability	IEC 60384–14	V_R + 20 surge pulses at 2.5 kV (pulse every 5 seconds)
Passive Flammability	IEC 60384–14	IEC 60384–1, IEC 60695–11–5 Needle-flame test
Damp Heat Steady State	IEC 60068–2–78 Test Cab	+40°C and 93% RH, 56 days

Approvals

Mark	Specification	File Number
	EN/IEC 60384–14	SE/0140–16C
	UL 1414 (up to 1 µF, 85°C, 250 VAC)	E73869
	CSA – C22.2 No. 1 (up to 1 µF, 85°C, 250 VAC)	E73869
	UL 1283 (310 VAC)	E100117

Environmental Compliance

All KEMET EMI capacitors are RoHS Compliant.

RoHS Compliant

Table 1 – Ratings & Part Number Reference

Capacitance Value (µF)	Maximum Dimensions in mm			Lead Spacing (p)	f_o (MHz)	dV/dt (V/µs)	New KEMET Part Number	Legacy Part Number
	B	H	L					
0.001	3.9	7.5	13.5	10.2	53	1200	P276HE102M275(1)	PME271M410M(1)
0.0015	3.9	7.5	13.5	10.2	44	1200	P276HE152M275(1)	PME271M415M(1)
0.0022	3.9	7.5	13.5	10.2	37	1200	P276HE222M275(1)	PME271M422M(1)
0.0033	4.1	8.2	13.5	10.2	30	1200	P276HH332M275(1)	PME271M433M(1)
0.0047	5.1	10.5	13.5	10.2	24	1200	P276HL472M275(1)	PME271M447M(1)
0.0068	5.1	10.5	13.5	10.2	21	1200	P276HL682M275(1)	PME271MA4680M(1)
0.0068	5.2	10.5	18.5	15.2	19	1200	P276QE682M275(1)	PME271M468M(1)
0.010	5.2	10.5	18.5	15.2	16	1200	P276QE103M275(1)	PME271M510M(1)
0.015	5.2	10.5	18.5	15.2	13	1200	P276QE153M275(1)	PME271M515M(1)
0.022	6	12.5	18.5	15.2	10	1200	P276QL223M275(1)	PME271M522M(1)
0.033	6	12.5	18.5	15.2	8.4	1200	P276QL333M275(1)	PME271M533M(1)
0.047	6	12.5	18.5	15.2	7	1200	P276QL473M275(1)	PME271M547M(1)
0.068	7.8	13.5	18.5	15.2	5.6	1200	P276QP683M275(1)	PME271M568M(1)
0.1	8.5	14.3	18.5	15.2	4.3	1200	P276QS104M275(1)	PME271MB6100M(1)
0.1	7.6	14	24	20.3	4.1	600	P276CE104M275(1)	PME271M610M(1)
0.15	9	15	24	20.3	3.4	600	P276CJ154K275(1)	PME271M615K(1)
0.22	11.3	16.5	24	20.3	2.7	600	P276CP224K275(1)	PME271M622K(1)
0.1	8	17	27	22.5	3.9	600	P276SJ104M275(1)	PME271MD6100M(1)
0.15	8	17	27	22.5	3.3	600	P276SJ154K275(1)	PME271MD6150K(1)
0.22	10	19	27	22.5	2.6	600	P276SP224K275(1)	PME271MD6220K(1)
0.27	12	22	27	22.5	2.3	400	P276SU274K275(1)	PME271MD6270K(1)
0.33	12	22	27	22.5	2.1	400	P276SU334K275(1)	PME271MD6330K(1)
0.27	10.5	17.3	30.5	25.4	2.4	400	P276EG274K275(1)	PME271M627K(1)
0.33	12.1	19	30.5	25.4	2.1	400	P276EJ334K275(1)	PME271M633K(1)
0.47	15.3	22	30.5	25.4	1.8	400	P276EL474K275(1)	PME271M647K(1)
0.6	15.3	22	30.5	25.4	1.6	400	P276EL604K275(1)	PME271M660K(1)
Capacitance Value (µF)	**B (mm)**	**H (mm)**	**L (mm)**	**Lead Spacing (p)**	**f_o (MHz)**	**dV/dt (V/µs)**	**New KEMET Part Number**	**Legacy Part Number**

(1) Insert ordering code for lead type and packaging. See Ordering Options Table for available options.

Soldering Process

The implementation of the RoHS Directive has required the use of SnAgCu (SAC) or SnCu alloys as primary solder. These alloys require a higher liquidus temperature (217ºC – 221ºC) as compared to SnPb eutectic alloy (183ºC). Due to the higher pre-heat and wave temperatures, the heat stress to components has increased considerably. Polypropylene capacitors are especially sensitive to soldering temperature due to the relatively low melting point of polypropylene material (160ºC – 170ºC). As a result, wave soldering can be destructive, especially to mechanically small polypropylene capacitors with lead spacings of 5 –10 mm. For more information, please refer to KEMET's Recommended Soldering Profiles or contact a KEMET representative. IEC Publication 61760–1 Edition 2 may also be consulted for general guidelines.

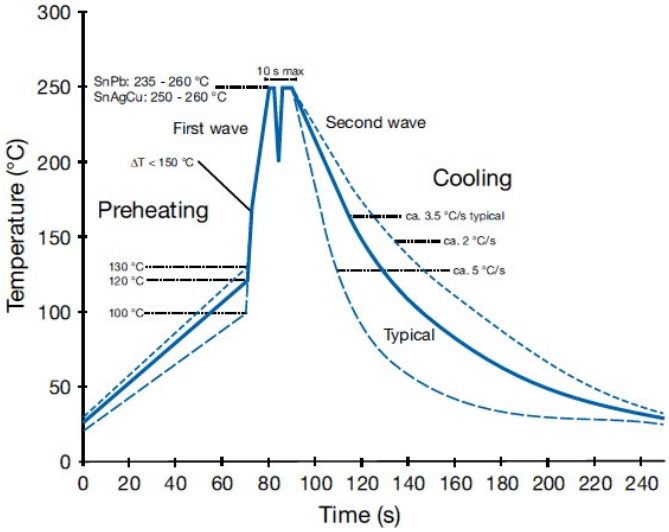

Construction

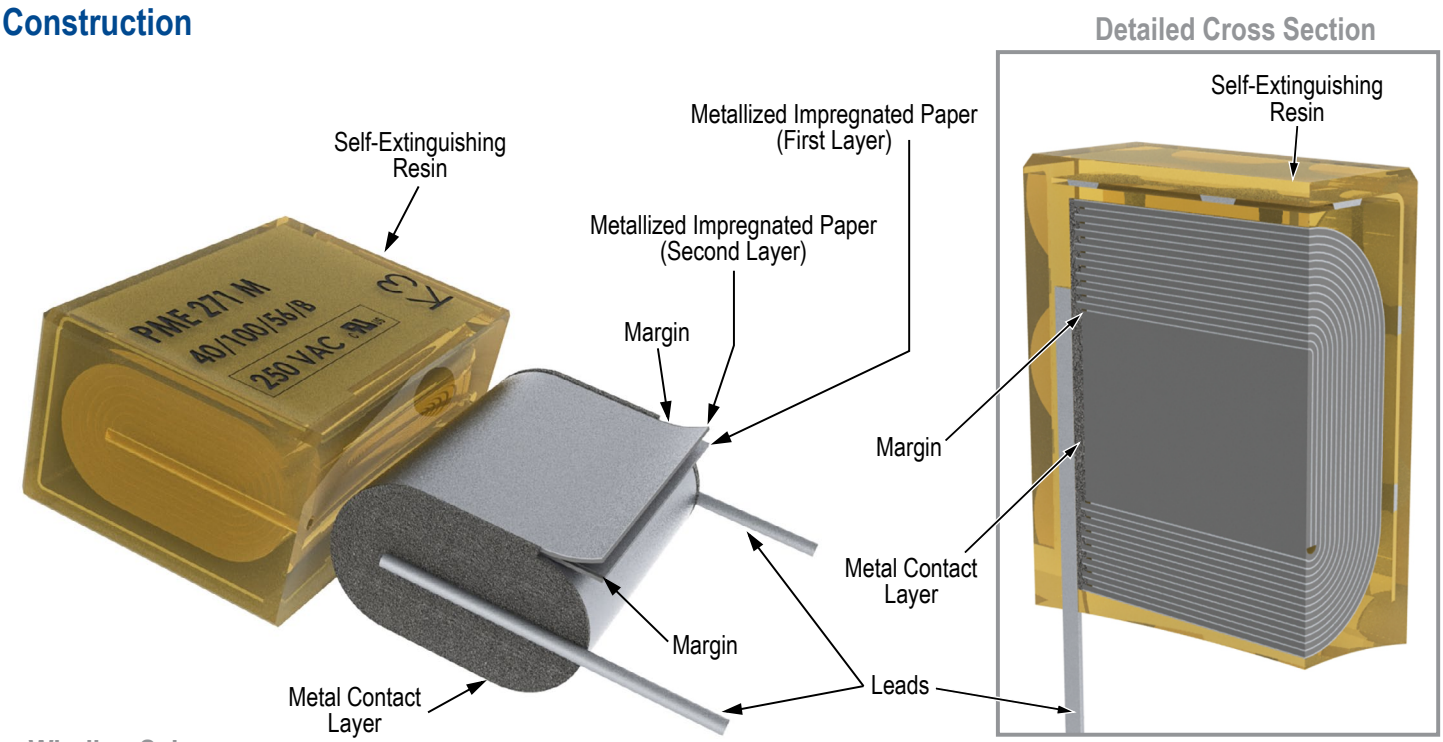

Winding Scheme

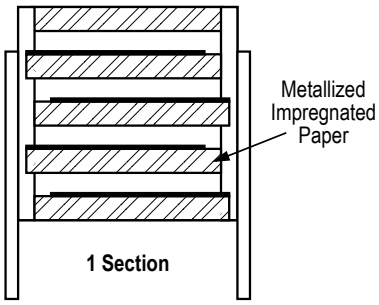

Marking

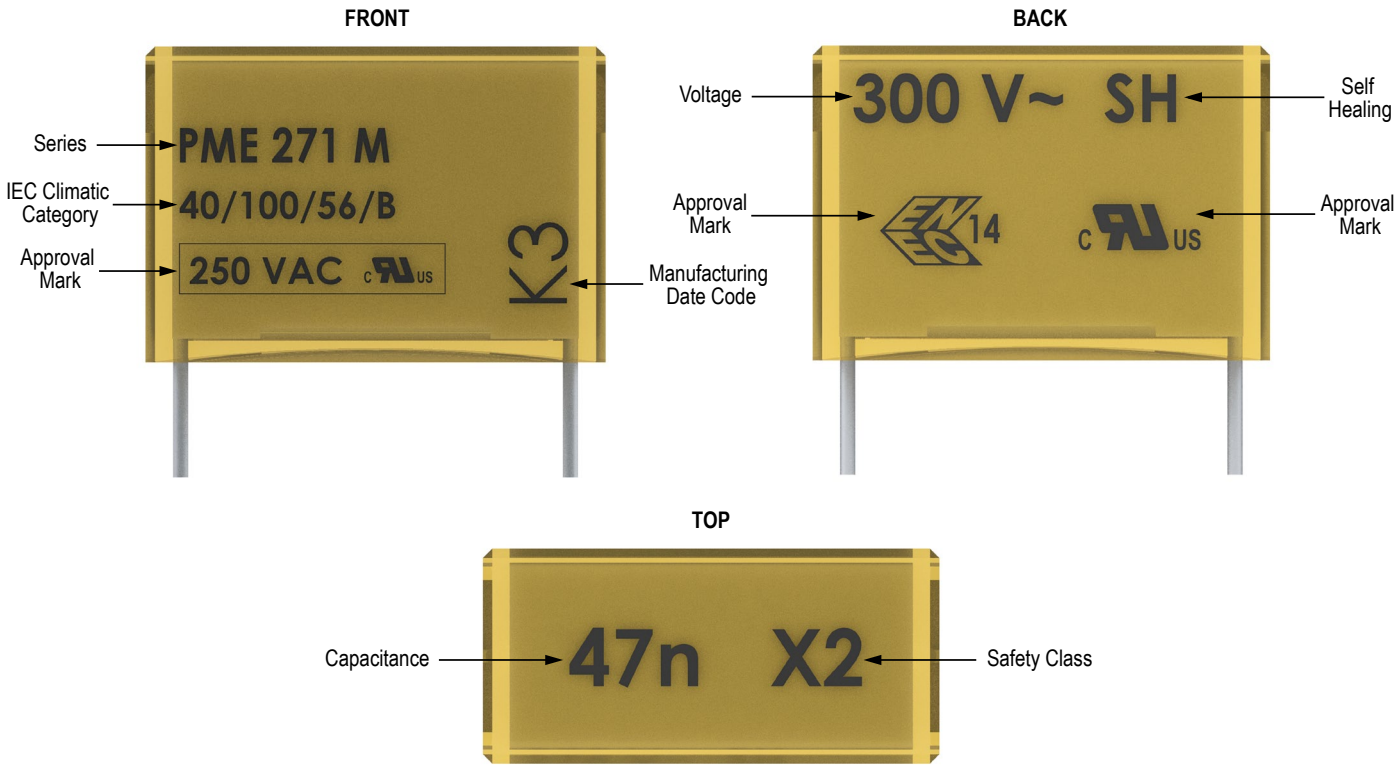
FRONT
Series
PME 271 M
IEC Climatic Category
40/100/56/B
Approval Mark
250 VAC
K3
Manufacturing Date Code
BACK
Voltage
300 V~ SH
Self Healing
Approval Mark
14
Approval Mark
TOP
Capacitance
47n X2
Safety Class

Packaging Quantities

Lead Spacing (mm)	Thickness (mm)	Height (mm)	Length (mm)	Bulk Short Leads	Bulk Long Leads	Standard Reel ø 360 mm	Large Reel ø 500 mm	Ammo Formed
10.2	3.9	7.5	13.5	2000	1000	700	1400	800
	4.1	8.2	13.5	2000	1000	600		780
	5.1	10.5	13.5	1600	800	600	1200	630
15.2	5.5	12.5	18	1000	500	600		
	6.5	12.5	18	600	400	400		
	7.5	14.5	18	600	400	400		
	8.5	16	18	400	250	400		
	5.2	10.5	18.5	1000	500	600		
	5.5	11	18.5	1000	500	500		
	6	12.5	18.5	600	400	400		
	7.3	13	18.5	600	400	400	800	
	7.8	13.5	18.5	600	400	400		
	8.5	14.3	18.5	500	300	350		
20.3	7.6	14	24	1500	250	250	500	
	8.4	14	24	1200	200	250	500	
	9	15	24	1500	200	250		
	11.3	16.5	24	1000	150	180	400	
22.5	8	17	27	1200	200			
	10	19	27	1000	150	200		
	12	22	27	800	100	180	350	
25.4	10.6	16.1	30.5	1000	150			
	10.5	17.3	30.5	1000	100			
	12.1	19	30.5	800	100			
	15.3	22	30.5	600	75			

Lead Taping & Packaging (IEC 60286–2)

Lead Spacing 10.2 – 15.2 mm

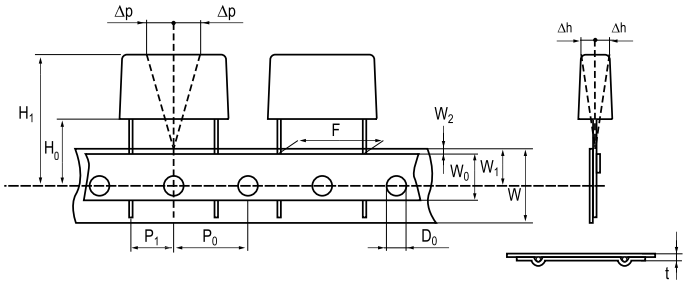

Lead Spacing 20.3 – 22.5 mm

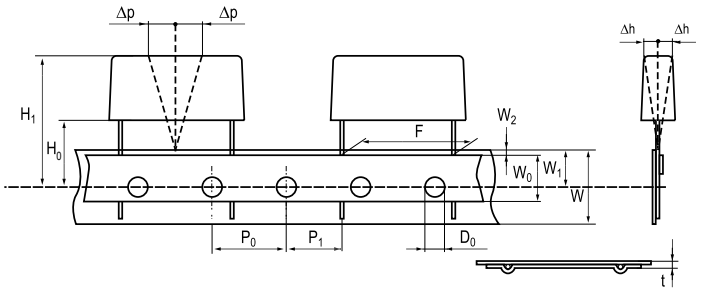

Formed Leads from 10.2 to 7.5 mm

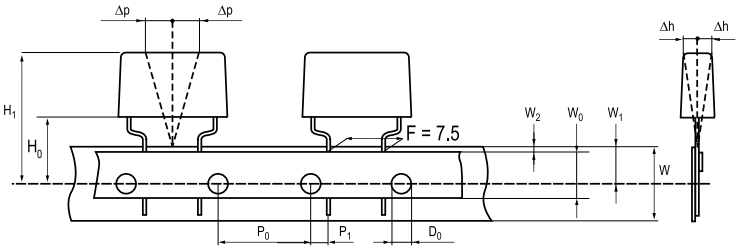

Taping Specification

Dimensions in mm								Standard IEC 60286–2
Lead spacing	+6/-0.1	F	Formed 7.5	10.2	15.2	20.3	22.5	F
Carrier tape width	+/-0.5	W	18	18	18	18	18	$18^{+1/-0.5}$
Hold-down tape width	+/-0.3	W_0	9	12	12	12	12	
Position of sprocket hole	+/-0.5	W_1	9	9	9	9	9	$9^{+0.75/-0.5}$
Distance between tapes	Maximum	W_2	3	3	3	3	3	3
Sprocket hole diameter	+/-0.2	D_0	4	4	4	4	4	4
Feed hole lead spacing	+/-0.3	P_0 (1)	12.7(4)	12.7	12.7	12.7	12.7	12.7
Distance lead – feed hole	+/-0.7	P_1	3.75	7.6	5.1	8.9	5.3	P^1
Deviation tape – plane	Maximum	Δp	1.3	1.3	1.3	1.3	1.3	1.3
Lateral deviation	Maximum	Δh	2	2	2	2	2	2
Total thickness	+/-0.2	t	0.7	0.7	0.7	0.7	0.9^{MAX}	0.9^{MAX}
Sprocket hole/cap body	Nominal	H_0 (2)	$18^{+2/-0}$	$18^{+2/-0}$	$18^{+2/-0}$	$18^{+2/-0}$	$18.5^{+/-0.5}$	$18^{+2/-0}$
Sprocket hole/top of cap body	Maximum	H_1 (3)	35	35	35	35	58	58^{MAX}

(1) Maximum cumulative feed hole error, 1 mm per 20 parts.
(2) 16.5 mm available on request.
(3) Depending on case size.
(4) 15 mm available on request.

Lead Taping & Packaging (IEC 60286–2) cont'd

Ammo Specifications

Series	Dimensions (mm)		
	H	W	T
R4x, R4x+R, R7x, RSB	360	340	59
F5A, F5B, F5D			
F6xx, F8xx			
PHExxx, PMExxx, PMRxxx	330	330	50

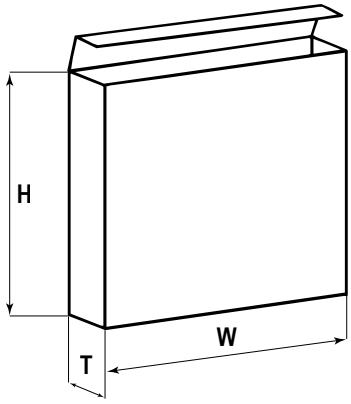

Reel Specifications

Series	Dimensions (mm)		
	D	H	W
R4x, R4x+R, R7x, RSB	355 500	30 25	55 (Max)
F5A, F5B, F5D			
F6xx, F8xx			
PHExxx, PMExxx, PMRxxx	360 500	30	46 (Max)

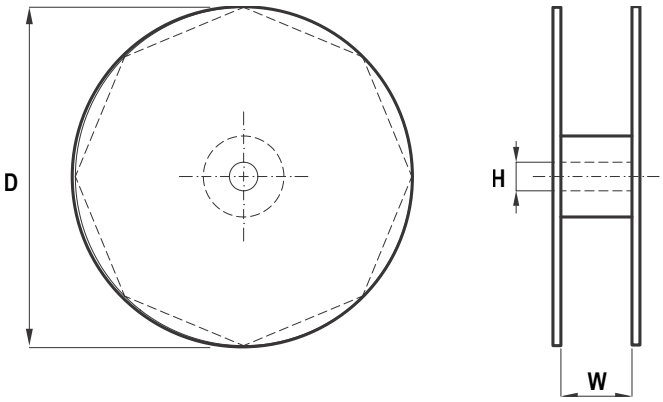

Manufacturing Date Code (IEC–60062)

Y = Year, Z = Month			
Year	Code	Month	Code
2000	M	January	1
2001	N	February	2
2002	P	March	3
2003	R	April	4
2004	S	May	5
2005	T	June	6
2006	U	July	7
2007	V	August	8
2008	W	September	9
2009	X	October	O
2010	A	November	N
2011	B	December	D
2012	C		
2013	D		
2014	E		
2015	F		
2016	H		
2017	J		
2018	K		
2019	L		
2020	M		

KEMET Corporation World Headquarters

2835 KEMET Way
Simpsonville, SC 29681

Mailing Address:
P.O. Box 5928
Greenville, SC 29606

www.kemet.com
Tel: 864-963-6300
Fax: 864-963-6521

Corporate Offices
Fort Lauderdale, FL
Tel: 954-766-2800

North America

Southeast
Lake Mary, FL
Tel: 407-855-8886

Northeast
Wilmington, MA
Tel: 978-658-1663

Central
Novi, MI
Tel: 248-306-9353

West
Milpitas, CA
Tel: 408-433-9950

Mexico
Guadalajara, Jalisco
Tel: 52-33-3123-2141

Europe

Southern Europe
Paris, France
Tel: 33-1-4646-1006

Sasso Marconi, Italy
Tel: 39-051-939111

Central Europe
Landsberg, Germany
Tel: 49-8191-3350800

Kamen, Germany
Tel: 49-2307-438110

Northern Europe
Bishop's Stortford, United Kingdom
Tel: 44-1279-460122

Espoo, Finland
Tel: 358-9-5406-5000

Asia

Northeast Asia
Hong Kong
Tel: 852-2305-1168

Shenzhen, China
Tel: 86-755-2518-1306

Beijing, China
Tel: 86-10-5829-1711

Shanghai, China
Tel: 86-21-6447-0707

Taipei, Taiwan
Tel: 886-2-27528585

Southeast Asia
Singapore
Tel: 65-6586-1900

Penang, Malaysia
Tel: 60-4-6430200

Bangalore, India
Tel: 91-806-53-76817

Note: KEMET reserves the right to modify minor details of internal and external construction at any time in the interest of product improvement. KEMET does not assume any responsibility for infringement that might result from the use of KEMET Capacitors in potential circuit designs. KEMET is a registered trademark of KEMET Electronics Corporation.

Disclaimer

All product specifications, statements, information and data (collectively, the "Information") in this datasheet are subject to change. The customer is responsible for checking and verifying the extent to which the Information contained in this publication is applicable to an order at the time the order is placed.

All Information given herein is believed to be accurate and reliable, but it is presented without guarantee, warranty, or responsibility of any kind, expressed or implied.

Statements of suitability for certain applications are based on KEMET Electronics Corporation's ("KEMET") knowledge of typical operating conditions for such applications, but are not intended to constitute – and KEMET specifically disclaims – any warranty concerning suitability for a specific customer application or use. The Information is intended for use only by customers who have the requisite experience and capability to determine the correct products for their application. Any technical advice inferred from this Information or otherwise provided by KEMET with reference to the use of KEMET's products is given gratis, and KEMET assumes no obligation or liability for the advice given or results obtained.

Although KEMET designs and manufactures its products to the most stringent quality and safety standards, given the current state of the art, isolated component failures may still occur. Accordingly, customer applications which require a high degree of reliability or safety should employ suitable designs or other safeguards (such as installation of protective circuitry or redundancies) in order to ensure that the failure of an electrical component does not result in a risk of personal injury or property damage.

Although all product–related warnings, cautions and notes must be observed, the customer should not assume that all safety measures are indicted or that other measures may not be required.