MICRO SWITCH
FREEPORT, ILLINOIS, U.S.A.
A DIVISION OF HONEYWELL
FED. MFG. CODE 91929

SWITCH-TOGGLE (MAGNETIC HOLD IN)

CATALOG LISTING
27ET51 – T

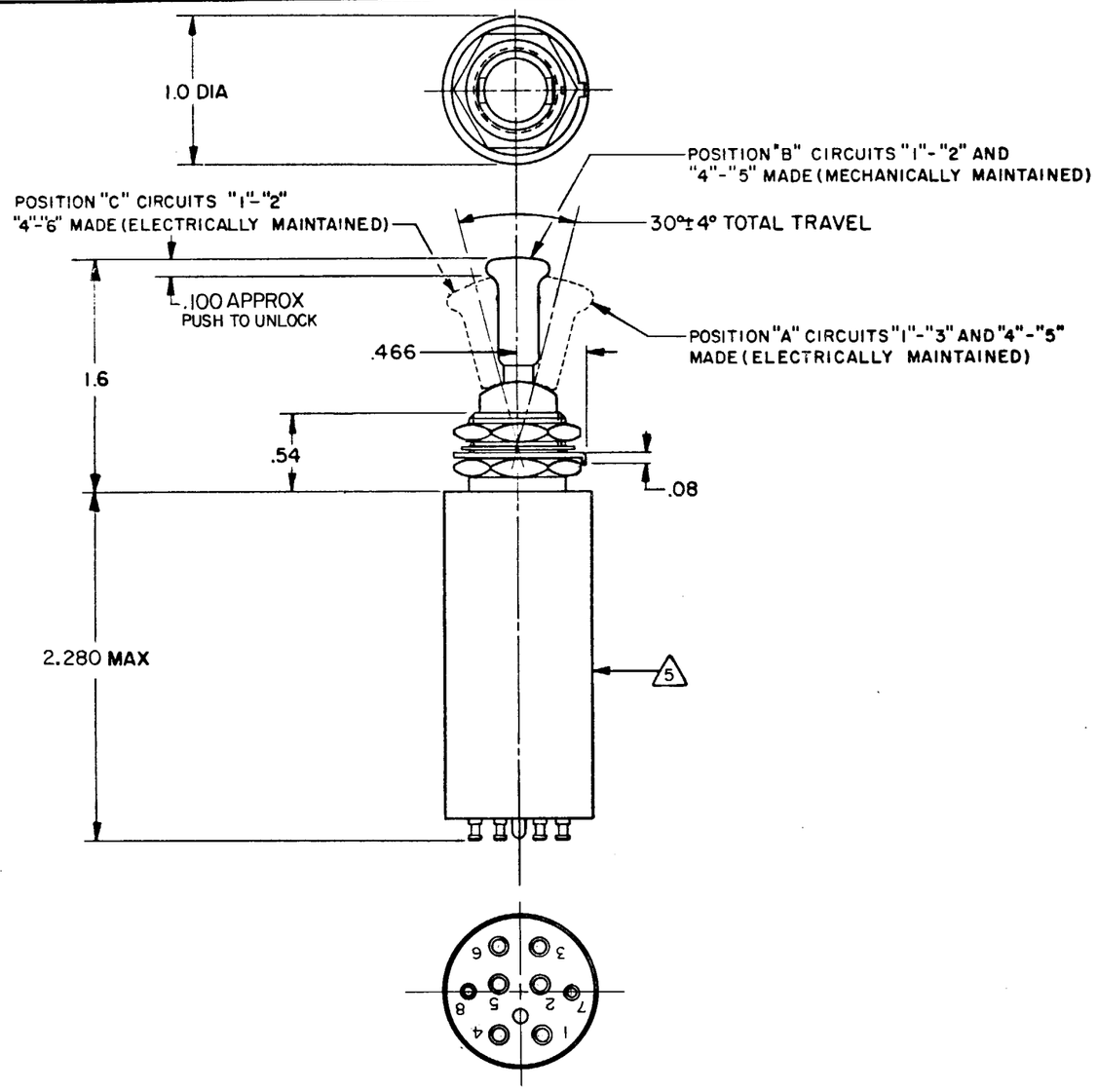

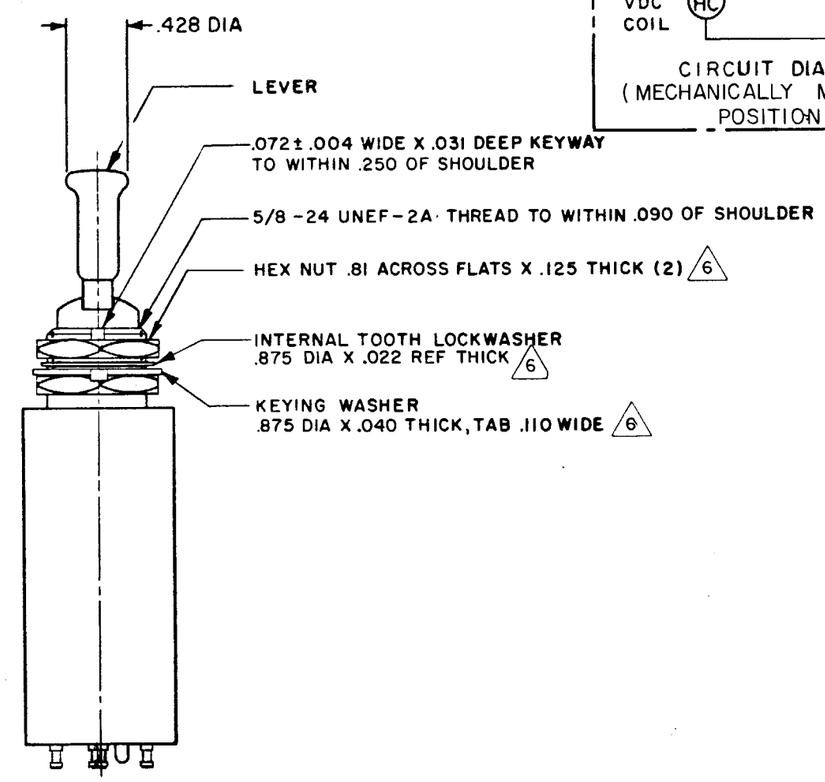

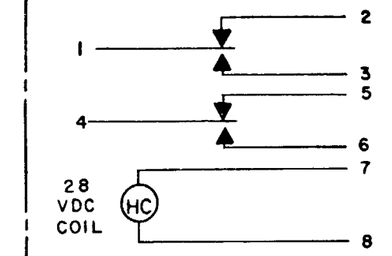

CIRCUIT DIAGRAM
(MECHANICALLY MAINTAINED POSITION B)

NOTES
1 - EXPOSED PARTS ARE OF CORROSION RESISTANT MATERIAL OR ARE SUITABLY PROTECTED TO PREVENT CORROSION. ENCLOSURE FINISHED WITH BLUE EPOXY BASED ENAMEL COLOR NO. 25184 PER FEDERAL STANDARD 595
2 - SWITCH SEALED PER MIL-S-5594
3 HOLD IN VOLTAGE: THE MINIMUM SPECIFIED VOLTAGE AT WHICH THE LEVER WILL REMAIN ACTUATED. HOLD IN MAY OCCUR AT A LOWER VALUE. DROP OUT VOLTAGE: THE VOLTAGE RANGE IN WHICH THE LEVER WILL BE RELEASED
4 - CIRCUITS CAN BE TRANSFERRED MANUALLY. ENERGIZING THE COIL WILL NOT CAUSE TRANSFER OF CIRCUITS
5 CIRCUIT IDENTIFICATION IS SHOWN ON SWITCH
6 HARDWARE MAY BE FURNISHED UNASSEMBLED PER MIL-S-5594

THIS DRAWING COVERS A PROPRIETARY ITEM AND IS THE PROPERTY OF MICRO SWITCH, A DIVISION OF MINNEAPOLIS-HONEYWELL REGULATOR CO. THIS DRAWING IS NOT TO BE COPIED OR USED WITHOUT THE APPROVAL OF MICRO SWITCH.

CHARACTERISTICS 3

SOLENOID RATING AT 20° C
STEADY STATE LIMITS – – – – – – 20-29 VDC
HOLD IN – – – – – – – – – – – – – 10 VDC
DROP OUT – – – – – – – – – – – 0-10 VDC
COIL RESISTANCE – – – – – – 220 OHM MIN

TO UNLOCK – – – – – – 2 1/2 - 4 1/2 LB

ELECTRICAL DATA

CONTACT ARRANGEMENT
S P D T (2)

VOLTAGE	RATING IN AMPERES							
	SEA LEVEL				65,000 FT			
	INRUSH	RES	IND	MOTOR	INRUSH	RES	IND	MOTOR
28 VOLTS DC		7	2			5	1.5	

SCALE FULL
DO NOT SCALE PRINT

UNLESS OTHERWISE NOTED
DIMENSIONS ARE IN INCHES
TOLERANCES ARE:

ONE PLACE	(.0)	±.030
TWO PLACE	(.00)	±.015
THREE PLACE	(.000)	±.005
ANGLES		±

WEIGHT 6.0 OZ MAX

M 27ET51 – T
DRAWING NUMBER
RELEASE NO. PR-5102
REPLACES
ISSUE 5
CHECK
REVISIONS
A PR-5102
B R E R 10 OCT 75 CO 44540
C GL H 9 SEPT 78 CO-53400
D K A G 14 JUL 83 CO54089
J A P 8 DEC 83
CHECK
CHECK
DRAWN R E R 10 OCT 75
CO-50376-003