MICRO SWITCH
FREEPORT, ILLINOIS, U.S.A.
A DIVISION OF HONEYWELL
FED. MFG. CODE 91929

SWITCH-ENCLOSED

CATALOG LISTING
4CE7

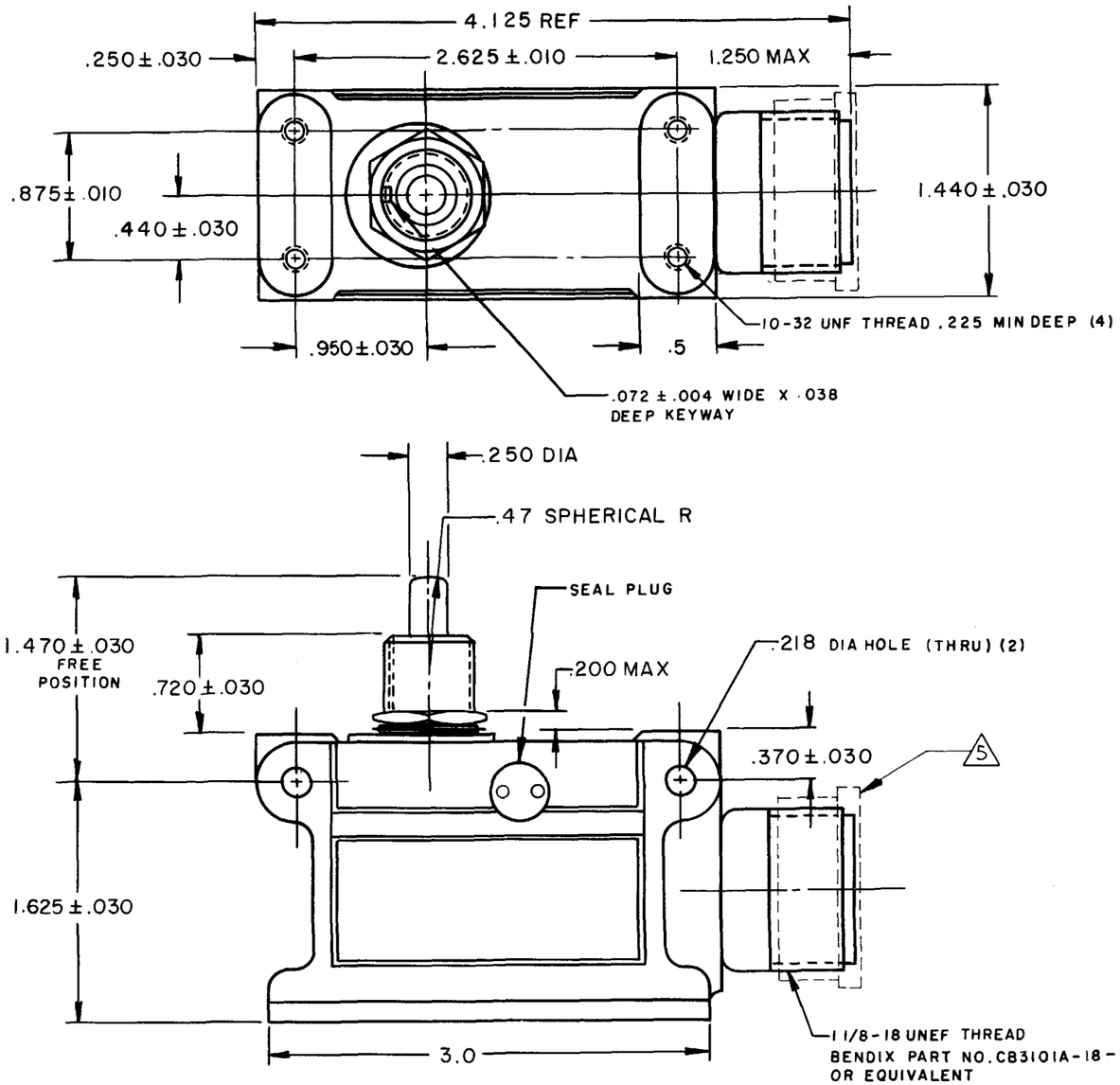

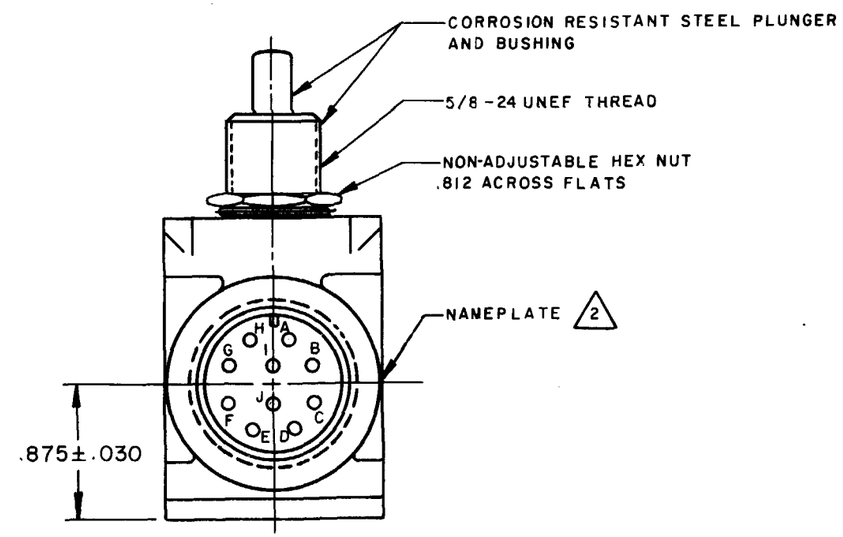

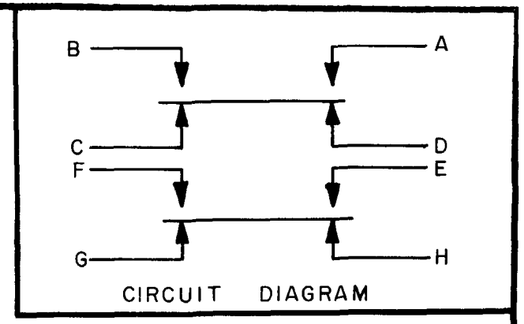

CIRCUIT DIAGRAM

THIS DRAWING COVERS A PROPRIETARY ITEM AND IS THE PROPERTY OF MICRO SWITCH, A DIVISION OF MINNEAPOLIS-HONEYWELL REGULATOR CO. THIS DRAWING IS NOT TO BE COPIED OR USED WITHOUT THE APPROVAL OF MICRO SWITCH.

CHARACTERISTICS	ELECTRICAL DATA	SCALE FULL
OPERATING FORCE - - - - - - - 6-12 LB	CONTACT ARRANGEMENT SEE CIRCUIT DIAGRAM	DO NOT SCALE PRINT
FULL OVERTRAVEL FORCE - - - 30 LB MAX		UNLESS OTHERWISE NOTED DIMENSIONS ARE IN INCHES
RELEASE FORCE - - - - - - - 5 LB MIN	10 A-125 OR 250 VAC	TOLERANCES ARE:
PRETRAVEL - - - - - - - - - .070 MAX		ONE PLACE (.0) ±.030
DIFFERENTIAL TRAVEL - - - - .045 MAX		TWO PLACE (.00) ±.015
OVERTRAVEL - - - - - - - - .230 MIN		THREE PLACE (.000) ±.005
		ANGLES ±
		WEIGHT 12.5 OZ MAX

NOTE-
1- ALUMINUM ALLOY ENCLOSURE ANODIZED, IMPREGNATED AND FINISHED WITH ONE COAT OF PRIMER
2- CIRCUIT IDENTIFICATION SHOWN ON NAMEPLATE
3- SHOCKPROOF PER MIL-S-901 GRADE I, TYPE C, LIGHT-WEIGHT
B EQUIPMENT WITH NO PHYSICAL DAMAGE
4- WATERTIGHT PER MIL-STD-108, TABLE III, METHOD C, AT 1.3 PSI
C FOR 2 HOURS WHEN USED WITH MATING RECEPTACLE MS3106E-18-1S OR EQUIVALENT
5 FURNISHED WITH SNUG FITTING PLASTIC DUST CAP

4CE7 | M | DRAWING NUMBER | RELEASE NO. SR11445 | REPLACES | ISSUE | CHECK | REVISIONS

A	SR11445	L S D 3 FEB 64
B	SR11445	O M W 18 FEB 64
C	CO19325	H B W 18 JUN 64
D	CO21356	L S D 7 APR 66
E	CO-53016	K A G 23 JUN 83
D	CO 58411	C J H 15 NOV 85
E	204537	S A V 14 DEC 01

DRAWN L S D 3 FEB 64 | CHECK DAW 7 FEB 64 | CHECK J R H 7 FEB 64 | CHECK

FO-50378-003